BAXI

Residential Heating Boilers

BAXI Luna3 Comfort

BAXI Luna Duo-Tec GA+

HYDRO HEAT SUPPLIES

QUALITY HYDRONIC HEATING EQUIPMENT

BAXI Residential Heating Boilers

The BAXI residential range of wall mounted hydronic boilers provides peace of mind and energy efficiency for home heating systems. BAXI are experts in the field of high output residential boilers, both in heating only and combination models to supply both heating and domestic hot water (DHW). Boilers available in outputs of 12kW to 40kW.

BAXI World Leading Heating Technology

BAXI are based in Italy and are one of the largest specialised manufacturers of hydronic heating and hot water boilers in Europe. BAXI are committed to environmentally sustainable water based heating solutions, with expertise dedicated solely to boiler manufacture and development. This is what sets the excellence of BAXI boilers apart.

BAXI have been supported and represented by HydroHeat Supplies in Australia for over ten years as the exclusive importer. As such HydroHeat are proud to maintain what is widely considered the best and most efficient range of heating boilers available on the Australian market.

Energy Efficient, Clean Green Heating

The credentials of BAXI boilers as the greenest and most energy efficient on the market are genuine. The **Duo-Tec GA+** range of condensing boilers has won awards across Europe and the conventional **Luna3 Comfort** boiler has been installed worldwide on leading projects. It is these exact boilers that HydroHeat has brought to the Australian market, fully certified for Australian use, bringing the best of the world to our doorstep.

As the premier hydronic heating supply company in Australia, HydroHeat supply boilers as part of complete hydronic heating systems and are synonymous with the BAXI ethos, being driven by sustainability and excellence in hydronic heating.

- The Clean, Green, Home Heating Solution
- BAXI Quality European Manufacturing
- Experts in Hydronic Boiler Technology
- Class Leading Boiler Efficiency Ratings
- Extensive Range, Indoor & Outdoor
- Warranty & Service Support
- Over 10 years in Australia
- Designed for integration with Hydronic Systems
- Full AGA Australian Gas Approvals

After Sales Support & Service

BAXI servicing available Australia wide by HydroHeat trained BAXI installers. HydroHeat reinforce the importance that units are installed and commissioned correctly in accordance with BAXI guidelines, and maintained by competent contractors.

BAXI boilers carry Australian approvals (AGA Cert 6253 / 7023) for both Natural Gas and Propane (LPG), and are approved for both indoor and outdoor use.

The BAXI Advantage Why Install a BAXI Boiler?

The boiler is the central component of a home heating or hot water system, and where the most significant gains can be made in energy and cost savings. Careful selection is required to ensure maximum benefit, look for these key features:

	BAXI Duo-Tec GA+ *(condensing type)*	BAXI Luna3 Comfort *(traditional type)*
Versions Available	Heating, Combination	Heating, Combination
AGA Approvals for Use	Indoor, Outdoor	Indoor, Outdoor
Gas Type	Natural Gas, LPG	Natural Gas, LPG
Output Range	12-28kW (heating), 24-40kW (combi)	25k-31kW (heating), 31kW (combi)
Condensing	Yes	No
Modulation Ratio	1:7	1:3
Push Button Digital Control	Yes	Yes
SEDBUK Rated Efficiency	A / 97.3%	C / 83%
Burner, Heat Exchanger	Stainless Steel, Composite Casing	Stainless Steel, Finned Copper Tube
Service Support, Warranty	Yes, 2 Years	Yes, 1Year

Selecting an Efficient Boiler

When deciding on your boiler type and model, the key is to assess the volume of use and type of application intended. In some residential circumstances such as a small apartment or single dwelling a conventional type boiler may suffice. However the greater payback and efficiency of a condensing boiler can still make it a preferable option. The 'modulation ratio' of a BAXI GA+ condensing boiler means it can effectively turn itself down when full heat is not required, resulting in significant gas savings and drastically reducing CO and NOx emissions.

Heat output (kW) needs to be matched to heating requirements, and a Combi boiler may be the desired choice to supply both domestic hot water (DHW) and heating needs. All BAXI boilers ensure longevity with the ability of the secondary heat exchanger to withstand corrosion. It's also worth keeping in mind that a gas boiler is more efficient than any electric or solid fuel heating system.

To Condense or Not to Condense

Gas condensing boilers represent the latest in boiler technology. Gas condensing technology has been used successfully overseas for over 25 years and since 2004 has been legislated for mandatory use in home heating throughout Europe. In Australia though, traditional type boilers are still quite common, with the benefits and higher efficiency of Condensing boilers now being recognised and adopted.

Condensing technology reuses the 'latent' heat from the flue gases which in turn lowers the temperature of the flue. By doing this the flue gases emit 90% less CO (Carbon Dioxide) and 80% less NOx (Nitric Acid) in comparison with conventional boilers. The BAXI Duo-Tec GA+ range of condensing boilers offer class leading efficiency of up to 97%. The Luna3 conventional range is also class leading with an operating efficiency of up to 83%.

Retro Fit and New Install

Both the Luna3 Comfort and Duo-Tec GA+ wall mounted boilers are suitable for retro-fit to an existing home heating system, or installation with new build homes. In addition the Duo-Tec GA+ range is ideal for integration with other systems such as pool heating, solar and under floor heating.

Energy and Cost Saving Benefits

Hydronic heating is the clean, green, low emission heating solution. Considering heating makes up the largest proportion of a home's total energy requirements, in a typical 30yr old home of approx 17 squares an efficient hydronic heating boiler has the potential to reduce annual gas running costs for space heating by as much as 35%. This saving is compounded further if the incumbent system is electric powered or solid fuel. The return on investment of a hydronic heating system is also tangible in add on resale value.

BAXI residential boilers are rated with the European **SEDBUK** rating system, the accepted standard for residential boiler efficiency rating. On the A > G scale, any boiler rated 'C' or higher is considered very good. The Duo-Tec GA+ range achieves the highest 'A' rating, with BAXI Luna3 boilers achieving a 'C' rating. The combined energy and emissions savings of either deliver substantial environmental benefits.

BAXI Luna3 Comfort

STANDARD EFFICIENCY RESIDENTIAL CONVENTIONAL BOILER

The BAXI Luna3 Comfort wall mounted conventional boiler offers European technology in an efficient (83%), compact and easy to install unit for domestic use.

The Luna 3 Boilers can provide heating only or combi heating and domestic hot water (DHW) in the one unit. Available in 25kW and 31kW for heating only and a 31kW combination model. Luna3 boilers are Australian approved and suitable for indoor and outdoor use.

Indoor Model Shown

Features & Benefits

- Compact wall mounted and easy to install
- Ideal for smaller households and apartments, Indoor installation
- Available in heating only (25 and 31kW) or combination heating and domestic hot water (31kW)
- Removable digital control panel allows easy adjustment of heating and domestic hot water settings
- 83% efficient class leading conventional boiler
- Every model comes in indoor or outdoor
- Stainless Steel Burner, Stainless Steel DHW heat exchanger (310 model), WaterMark certified

Control System

- Electronic temperature control by NTC probes
- Electronic Flame modulation and electronic ignition
- Overheat limit thermostat
- 300kPa Pressure relief valve on heating system
- Hydraulic pressure switch to prevent boiler operating in the event of low water
- System to prevent 3 way valve and pump sticking, cycles every 24 hours
- Anti frost device on heating
- Easy to clean domestic water filter

83%

Energy Efficiency
Genuine Rated SEDBUK efficiency

Control
Removable remote control panel

Residential
Houses, apartments medium use

1YR

Warranty
1 Yr Boiler warranty
5 Yr Heat Exchanger

Removable Remote Control
Easy to use & program.

Luna3 Comfort models feature a removable control panel/thermostat that enables remote programming of the heating system, domestic hot water adjustment and full boiler diagnostics.

Luna3 Comfort
Indoor Models

Luna3 Comfort
Outdoor Models

Specification & Performance

		Heating Only		Heating & DHW (COMBI)
		Luna3 Comfort 25kW	Luna3 Comfort 31kW	Luna3 Comfort 31kW
Model Code		LUNA3-1240	LUNA3-1310	LUNA3-310
Type (Indoor/Outdoor)	-	ID / OD	ID / OD	ID / OD
Gas Used (Natural/Propane)	-	NG / LPG	NG / LPG	NG / LPG
Nominal Gas Consumption	MJ/h	103	141	141
Turn Down Gas Consumption	MJ/h	38	55	55
Max Output at 80/60 °C	kW	25	31	31
Reduced Output at 80/60 °C	kW	9.3	10.4	10.4
Min-Max Water Circuit Pressure (Heating)	bar/kPa	0.5-3.0 / 50-300	0.5-3.0 / 50-300	0.5-3.0 / 50-300
Min-Max Water Circuit Pressure (DHW)	kPa	-	-	0.15-8.0 / 15-800
DHW Production at ΔT=25°C	l/min	-	-	16,4
DHW Production at ΔT=35°C	l/min	-	-	11,7
Flue Connection	mm	60 / 100	60 / 100	60 / 100
Two Pipe Flue & Air Duct Diameter	mm	80 / 80	80 / 80	80 / 80
Gas Input Pressure (Natural Gas / LPG)	kPa	1.13 / 2.75	1.13 / 2.75	1.13 / 2.75
Power Supply	V/Hz	230 - 240V / 50Hz	230 - 240V / 50Hz	230 - 240V / 50Hz
Power Consumption	W	135	165	165
Net Weight (Indoor / Outdoor)	kg	37	41	43
Volume Expansion Tank	ltr	8	10	10
Noise Level at 1 metre	db(A)	<50	<50	<50
SEDBUK Rating	A-G	C	C	C
Modulation Ratio	-	1:3	1:3	1:3
* Gross / Net Efficiency at 80/60 °C	%	83 / 92.9	83 / 93.1	83 / 92.9

* Gross Efficiency according to Australian standard (AS 4552)
* Net Efficiency according to European standard (92/42/EEC)

AUSTRALIAN APPROVALS

- Approved for indoor, outdoor use
- Approved for Natural Gas, Propane Gas
- Electrical and fittings approvals

WaterMark — Licence number 20063

Certified Product Australian Standard — Complies with AS 3498/AS 4552

Certified by The Australian Gas Association — AGA Cert No. 6253

N28384

SEDBUK Rating

C

BAXI Luna3 Boilers Rate 'C' = Very Good

A	Above 90%
B	86% - 90%
C	82% - 86%
D	78% - 82%
E	74% - 78%
F	70% - 74%
G	Below 70%

hydroheat.com.au | HYDROHEAT

BAXI Luna Duo-Tec GA+

HIGH EFFICIENCY RESIDENTIAL CONDENSING BOILER

The Baxi Duo-Tec GA+ (Gas Adaptive) boiler range is ideal for residential use with high demand. The Duo-Tec GA+ uses gas adaptive control, which automatically calibrates and adjusts to the type of gas supply for reduced consumption.

Gas condensing technology extracts and reuses heat from burnt gases to deliver a rated efficiency of 97% making the Duo-Tec GA+ range one of thegreenest and most efficient residential boilers on the Australian market.

The class leading 1:7 modulation 'turndown' ratio adjusts heat output to suit demand, reducing boiler 'on-off' cycling for ultra smooth energy efficient operation, increased longevity and gas savings.

Indoor Model Shown

Features & Benefits

- Gas Adaptive (GA) self commissioning system automatically detects and adjusts for NG or LPG supply
- 7 model choices 12kW to 40kW for indoor/outdoor use Ideal for larger households with high demands
- Heating only or combination models for heating and domestic hot water (DHW) use
- Wall hung, compact size and minimal weight
- Digital control panel with clear LCD display
- Built-in outdoor temperature compensation sensor option
- Frontal access for easy servicing
- Complete soundproofing for quiet operation
- Stainless Steel AISI 316L premixing burner and heat exchanger with composite casing
- System to prevent pump sticking, cycles every 24 hours

High Efficiency Condensing

- 97% energy efficient - Class leading super efficient condensing technology reduces emissions, saves money
- Upgraded integral High-Flow Modulating Pump for increased flow rate
- ***'think'*** intelligent system management to maximise component integration efficiency
- 1:7 modulation 'turndown' ratio adjusts to heat demand, reduces boiler output to prevent 'on-off' short cycling
- Condensing pre-mix burner, reuses waste flue gases reduces noxious waste (up to 80% of NOx, 90% of CO)
- Modulating fan with electronic speed adjusting system
- For extremely high residential demand applications consider the NEW **35kW Duo-Tec MP+** light commercial boiler. A new class of boiler combining commercial features in a residential compatible package

97%

Energy Efficiency
Genuine Rated SEDBUK efficiency

Residential
Large households with high demand

2YR

Warranty
2 Yr Boiler
5 Yr Heat Exchanger

Gas Adaptive
Condensing Boiler Technology

think intelligence within

think
Intelligent integrated operating system

1:7

1:7 Modulation
Adapts heat output, save short cycling

Control System

- Overheat limit thermostat of water/flue exchanger
- Hydraulic pressure switch to prevent boiler operating with low water
- Safety NTC sensor to prevent flue overheating
- Electronic temperatures controlled by NTC sensors
- Pressure relief valve set at 3 bar
- Frost protection, as well as pump and diverter valve seize prevention

Duo-Tec GA+
Indoor Models

Duo-Tec GA+
Outdoor Models

Specification & Performance

		Heating Only			Heating & DHW (COMBI)			
		Duo-Tec+ GA 12kW	Duo-Tec+ GA 24kW	Duo-Tec+ GA 28kW	Duo-Tec+ GA 24kW	Duo-Tec+ GA 28kW	Duo-Tec+ GA 33kW	Duo-Tec+ GA 40kW
Model Code		GA 1.12	GA 1.24	GA 1.28	GA 24	GA 28	GA 33	GA 40
Type (Indoor/Outdoor)	-	ID / OD	ID / OD	ID / OD	ID / OD	ID / OD	ID / OD	ID / OD
Gas Used (Natural/Propane)		NG / LPG	NG / LPG	NG / LPG	NG / LPG	NG / LPG	NG / LPG	NG / LPG
Nominal Gas Consumption (Heating/DHW)	MJ/h	50	98	115	85 / 98	98 / 115	115 / 135	125 / 164
Turn Down Gas Consumption	MJ/h	10	14	16	14	16	20	25
Max DHW Heat Output	kW	-	-	-	24.0	28.0	33.0	40.0
Max Output at 80/60 °C	kW	12.0	25.0	28.0	20.0	25.0	28.0	32.0
Reduced Output at 80/60 °C	kW	2.0	3.4	4.0	3.4	3.8	4.7	5.7
Max Output at 50/30 °C	kW	13.1	26.1	30.5	21.8	26.1	30.6	34.9
Reduced Output at 50/30 °C	kW	2.2	3.7	4.3	3.7	4.1	5.1	6.3
Min-Max Water Circuit Pressure (Heating)	bar/kPa	0.5-3.0 / 50-300	0.5-3.0 / 50-300	0.5-3.0 / 50-300	0.5-3.0 / 50-300	0.5-3.0 / 50-300	0.5-3.0 / 50-300	0.5-3.0 / 0-300
Min-Max Water Circuit Pressure (DHW)	bar/kPa	-	-	-	0.15- 8.0 / 15-800	0.15- 8.0 / 15-800	0.15- 8.0 / 15-800	0.15- 8.0 / 15-800
DHW Production at ΔT=25°C	l/min	-	-	-	13,6	15,9	18,3	22,9
DHW Production at ΔT=35°C	l/min	-	-	-	9,8	11,5	13,5	16,4
Flue Connection	mm	60 / 100	60 / 100	60 / 100	60 / 100	60 / 100	60 / 100	60 / 100
Waste NOx Emissions	mg/ kWh	23.5	17.3	18.1	16.1	19.3	30.7	26.5
Gas Input Pressure (NG / LPG)	kPa	1.13 / 2.75	1.13 / 2.75	1.13 / 2.75	1.13 / 2.75	1.13 / 2.75	1.13 / 2.75	1.13 / 2.75
Power Supply	V/Hz	230V / 50Hz	230V / 50Hz	230V / 50Hz	230V / 50Hz	230V / 50Hz	230V / 50Hz	230V / 50Hz
Power Consumption	W	108	102	114	102	114	133	142
Net Weight (Indoor / Outdoor)	kg	34.5 / 40.5	34.5 / 40.5	36 / 42	38.5 / 44.5	38.5 / 44.5	39.5 / 45.5	41 / 47
Volume Expansion Tank	lt	8	8	10	8	8	10	10
Noise Level at 1 metre	db(A)	<45	<45	<45	<45	<45	<45	<45
SEDBUK Rating	A-G	A	A	A	A	A	A	A
Modulation Ratio	-	1:7	1:7	1:7	1:7	1:7	1:7	1:7
* Gross / Net Efficiency at 80/60 °C	%	91.2 / 97.8	91.2 / 97.6	91.2 / 97.6	91.1 / 97.7	91.1 / 97.7	91.1 / 97.7	91.1 / 97.6
* Gross / Net Efficiency at 50/30 °C	%	97.1 / 105.8	97.1 / 105.7	97.1 / 105.7	97.3 / 105.8	97.3 / 105.8	97.3 / 105.8	97.3 / 105.8

*** Gross Efficiency according to Australian standard (AS 4552)**
*** Net Efficiency according to European standard (EN 677 - condensing boilers)**

AUSTRALIAN APPROVALS

- Approved for indoor, outdoor use
- Approved for Natural Gas, Propane Gas
- Electrical and fittings approvals

WaterMark
Licence number 20063

Certified Product Australian Standard
Complies with AS 3498/AS 4552

Certified by The Australian Gas Association
AGA Cert No. 7023

N28384

SEDBUK Rating

A

BAXI Duo-Tec GA Boilers Rate 'A' = Excellent

A	Above 90%
B	86% - 90%
C	82% - 86%
D	78% - 82%
E	74% - 78%
F	70% - 74%
G	Below 70%

hydroheat.com.au | HYDROHEAT

Technical Diagrams

Luna3 Comfort All Models

INDOOR MODEL

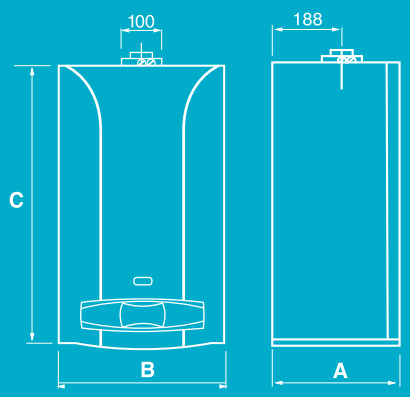

OUTDOOR MODEL

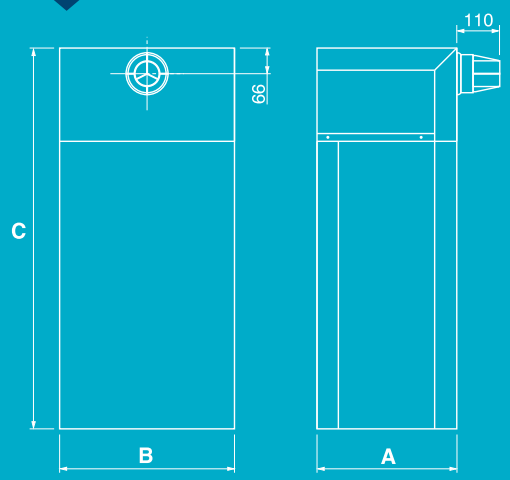

		Indoor Model	Outdoor Model
A = Depth	mm	350	368
B = Width	mm	450	473
C = Height	mm	763	970

For outdoor models flue discharge can be modified to left / right or top discharge. Available on request

CONNECTION DIAGRAM

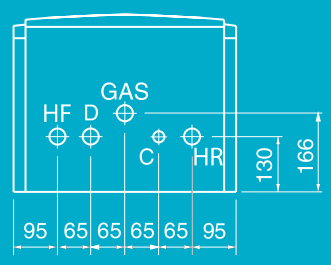

Luna3 Comfort All Models	
HF: Heating Flow	¾″
HR: Heating Return	¾″
D: Domestic Hot Water	½″
GAS: Gas Inlet to Boiler	¾″
C: Cold Feed	½″

(All male BSP threads)

Luna Duo-Tec GA+ All Models

INDOOR MODEL

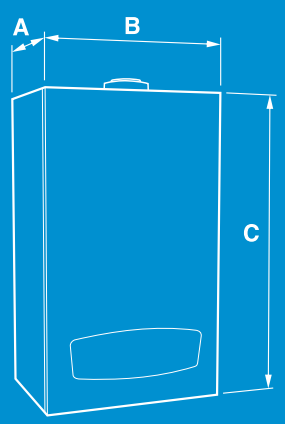

OUTDOOR MODEL

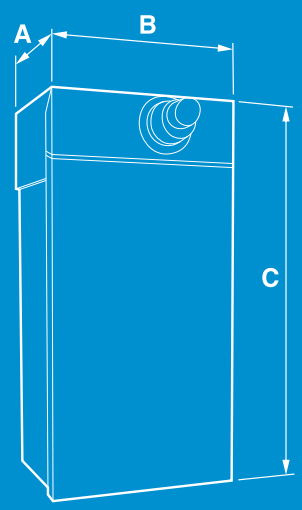

		Indoor Model	Outdoor Model
A = Depth	mm	345	362
B = Width	mm	450	473
C = Height	mm	763	980

For outdoor models flue discharge can be modified to left / right or top discharge. Available on request

CONNECTION DIAGRAM

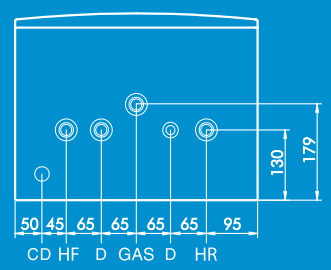

Luna Duo-Tec GA+ All Models	
HF: Heating Flow	¾″
HR: Heating Return	¾″
D: Domestic Hot Water	½″
GAS: Gas Inlet to Boiler	¾″
CD: Condensate Drain	Run in plastic to sewer

(All male BSP threads)

Resi_Boilers_EdNo7_Nov_2017

HYDROHEAT SUPPLIES

HydroHeat Supplies Pty. Ltd.
6 Helen Kob Drive Braeside, Victoria 3195
Phone: **(03) 9588 1299** Email: **info@hydroheat.com.au**
hydroheat.com.au

Distributed in Australia by **HydroHeat Supplies Pty Ltd.**